clarion

Clarion Co., Ltd.
Export Division - 22-3, Shibuya 2-chome, Shibuyaku, Tokyo, 150 Japan Tel: 03-3400-1121
Service Dept.- 50 kamitoda,Toda-shi,Saitama,335 Japan Tel: 048-443-1111 FAX:048-433-6996

Published by Service Dept.
298-5614-00 Nov.1997 P
Printed in Japan

Service Manual

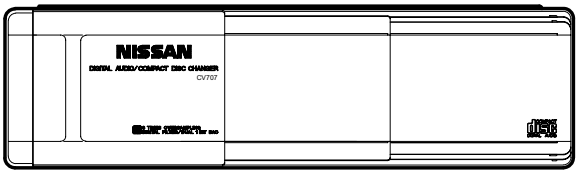

PN-2144U-B

NISSAN Automobile Genuine
6 DISC COMPACT CHANGER

Model PN-2144F-A
(Genuine N0. 28184-8F810)
(ID-No. CL0340)

Model PN-2144F-B
(Genuine N0. 28184-2F015)
(ID-No. CL0340)

Model PN-2144U-B
(Genuine N0. B8183-89902)
(ID-No. CV707)

Model PN-2144U-C
(Genuine N0. B8183-C9961)
(ID-No. CV737)

■SPECIFICATIONS

Sampling frequency:	44.1kHz
Frequency response:	5Hz to 20kHz (±1dB)
Signal to noise ratio:	105dB (1kHz) IHF.A
Wow and flutter:	below measurement limits
Power supply:	DC14.4V (10.8V to 15.6V) negative ground
Current consumption:	Less than 1A
Weight:	3.8lb. (1.7kg)

※ Specification and design are subject to change without notice for further improvement.

■COMPONENTS

PU-2144F-A/B(for Europe)

Main unit	————	1
Accessory box	CAA-355-310	1
Lock screw	716-1793-00	3

PU-2144U-B(for Europe)

Main unit	————	1
Accessory box	CAA-355-310	1
Mounting bracket	300-9725-01	2
Mounting bracket	300-9811-00	2
Lock screw	716-1793-00	3
Parts bag	————	
Clamp	321-0774-00	1
Supporter	330-9562-00	1
Insulok tie	335-3847-00	2
Rubber cap	345-4431-01	4
Urethane seat	345-7010-00	10
Machine screw	714-5006-79	1
Machine screw	714-5025-81	1
Special nut	722-0409-01	4
Jack nut	722-0547-00	4
D-sems-hexagon bolt	734-5008-37	4
D-sems-hexagon bolt	734-5020-39	4
Parts bag	————	
Cushion rubber	345-7651-00	2
Extension lead	854-7520-01	1

PU-2144U-C(for U.S.A.)

Main unit	————	1
Accessory box	CAA-355-240	1
Lock screw	716-1793-00	3
Extension lead	854-3561-01	1

■ To engineers in charge of repair or inspection of our products.

Before repair or inspection,make sure to follow the instructions so that customers and Engineers in charge of repair or inspection can avoid suffering any risk or injury.

1. Use specified parts.
   The system uses parts with special safety features against fire and voltage.Use only parts with equivalent characteristics when replacing them.
   The use of unspecified parts shall be regarded as remodeling for which we shall not be liable.The onus of product liability (PL) shall not be our responsibility in cases where an accident or failure is as a result of unspecified parts being used.
2. Place the parts and wiring back in their original positions after replacement or re-wiring.
   For proper circuit construction,use of insulation tubes,bonding,gaps to PWB,etc,is involved.The wiring connection and routing to the PWB are specially planned using clamps to keep away from heated and high voltage parts.Ensure that they are placed back in their original positions after repair or inspection.
   If extended damage is caused due to negligence during repair,the legal responsibility shall be with the repairing company.
3. Check for safety after repair.
   Check that the screws,parts and wires are put back securely in their original position after repair.Ensure for safety reasons there is no possibility of secondary ploblems around the repaired spots.
   If extended damage is caused due to negligence of repair,the legal responsibility shall be with the repairing company.
4. Caution in removal and making wiring connection to the parts for the automobile.
   Disconnect the battery terminal after turning the ignition key off.If wrong wiring connections are made with the battery connected, a short circuit and/or fire may occur.If extensive damage is caused due to negligence of repair,the legal responsibility shall be with the repairing company.
5. Cautions regarding chips.
   Do not reuse removed chips even when no abnormality is observed in their appearance.Always replace them with new ones.(The chip parts include resistors,capacitors,diodes,transistors,etc).The negative pole of tantalum capacitors is highly susceptible to heat,so use special care when replacing them and check the operation afterwards.
6. Cautions in handling flexible PWB
   Before working with a soldering iron,make sure that the iron tip temperature is around 270℃.Take care not to apply the iron tip repeatedly(more than three times)to the same patterns.Also take care not to apply the tip with force.
7. Turn the unit OFF during disassembly and parts replacement.Recheck all work before you apply power to the unit.
8. Cautions in checking that the optical pickup lights up.
   The laser is focused on the disc reflection surface through the lens of the optical pickup. When checking that the laser optical diode lights up,keep your eyes more than 30cms away from the lens.Prolonged viewing of the laser within 30cms may damage your eyesight.
9. Cautions in handling the optical pickup
   The laser diode of the optical pickup can be damaged by electrostatic charge caused by your clothes and body.Make sure to avoid electrostatic charges on your clothes or body,or discharge static electricity before handling the optical pickup.

9-1. Laser diode
   The laser diode terminals are shorted for transportation in order to prevent electrostatic damage.After replacement,open the shorted circuit.When removing the pickup from the mechanism,short the terminals by soldering them to prevent this damage.

9-2. Actuator
   The actuator has a powerful magnetic circuit.If a magnetic material is put close to it.its characteristics will change.Ensure that no foreign substances enter through the ventilation slots in the cover.

9-3. Cleaning the lens
   Dust on the optical lens affects performance.To clean the lens,apply a small amount of isopropylalcohol to lens paper and wipe the lens gently.

■CAUTION

This equipment has been tested and found to comply with the limits for a Class B digital device, pursuant to Part 15 of the FCC Rules.

These limits are designed to provide reasonable protection against harmful interference in a residential installation. This equipment generates uses, and can radiate radio frequency energy and, if not installed and used in accordance with the instructions, may cause harmful interference to radio communications. However, there is no guarantee that interference will not occur in a particular installation. If this equipment does cause harmful interference to radio or television reception, which can be determined by turning the equipment off and on.

Bottom View of CD Changer Unit

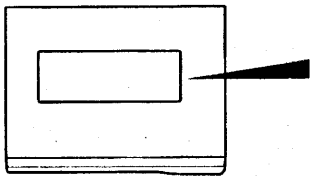

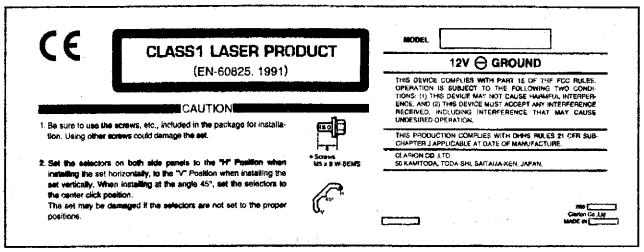

Top View of CD Changer Unit

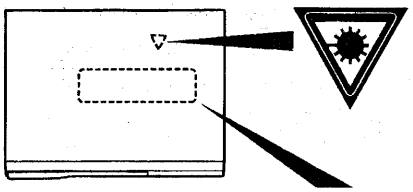

CAUTION –	INVISIBLE LASER RADIATION WHEN OPEN AND INTERLOCKS DEFEATED AVOID EXPOSURE TO BEAM.
VORSICHT!	UNSICHTBARE LASSERSTRAHLUNG TRITT AUS. WENN DECKEL GEOFFNET UND WENN SICHERHEITSVERRIEGELUNG UBERBRUCKT IST. NICHT DEM STRAHL AUSSETAZEN!
WARNING –	OSYNLIG LASERSTRÅLNING NÅR DENNA DEL AR OPPNAD OCH SPARR AR URKOPPLAD. STRÅLEN ÄR FARLIG.
ADVARSEL –	USYNLIG LASERSTRÅLING VED ÅBNING, NÅR SIKKERHEDSAFBRYDERE ER UDE AF FUNKTION. UNDGÅ UDSÆTTELSE FOR STRALING.

CAUTIONS:
This appliance contains a laser system and is classified as a "CLASS 1 LASER PRODUCT". To use this model properly, read this Owner's Manual carefully and keep this manual for your future reference. In case of any trouble with this player, please contact your nearest "AUTHORIZED service station". To prevent direct exposure to the laser beam, do not try to open the enclosure.

CAUTION
USE OF CONTROLS OR ADJUSTMENTS OR PERFORMANCE OF PROCEDURES OTHER THAN THOSE SPECIFIED IN THE OWNER'S MANUAL MAY RESULT IN HAZARDOUS RADIATION EXPOSURE.

■BLOCK DIAGRAM

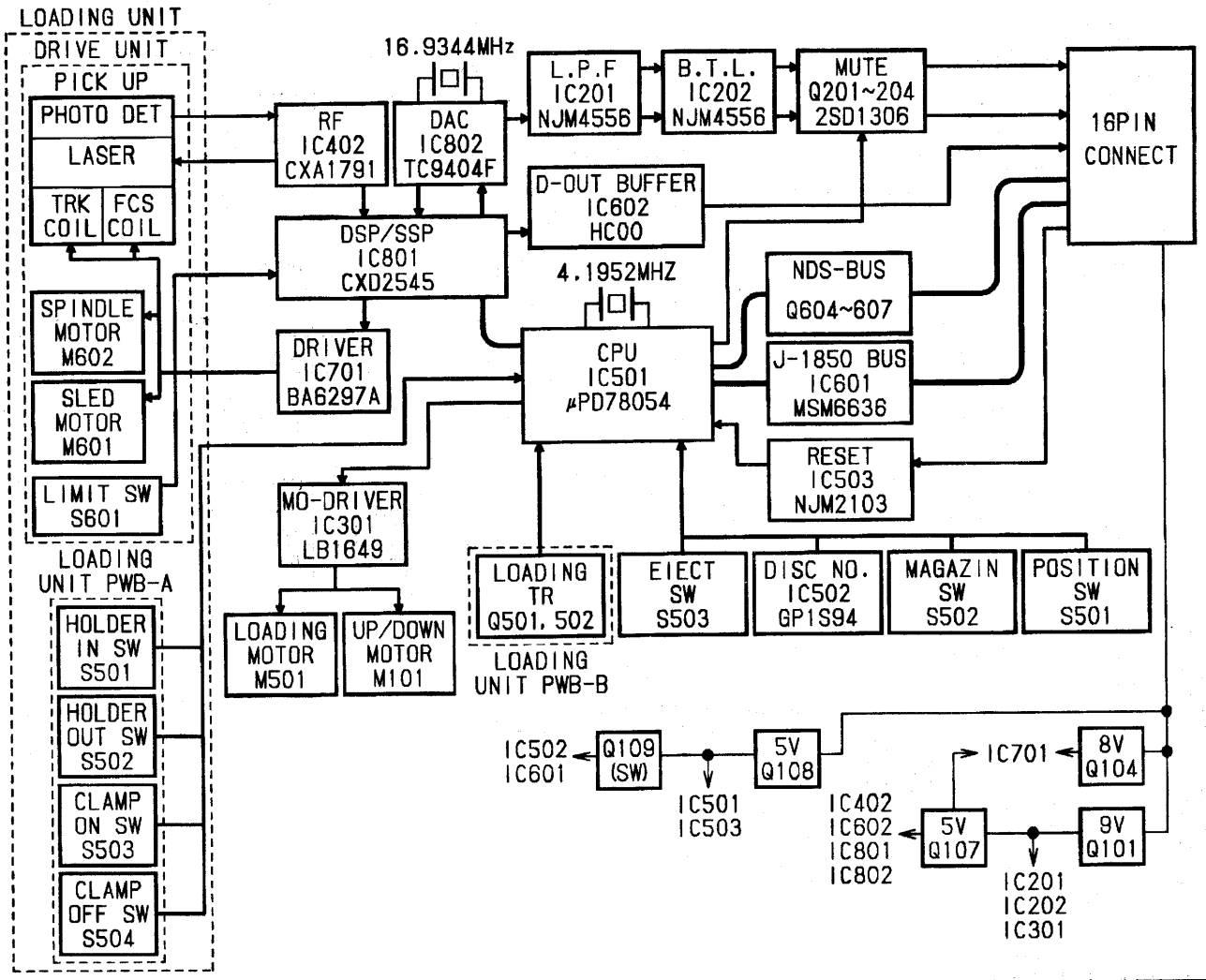

EXPLANATION OF IC

■ μPD78054GC-405-3B9 052-5020-00 CD Changer Controller

Outward Form

80 pins, plastic QFP

Terminal Description

No.	Symbol	I/O	Function
1	$\overline{\text{CLAMP-ON}}$	I	Terminal to input SW to detect whether the clamper is clamped. "L": clamped
2	$\overline{\text{LOD-TR2}}$	I	Terminal to input photo transistor to detect whether the clamped disc is 8 cm or 12 cm disc, or whether it is stored in magazine. "H": 12 cm disc, "L": stored in holder
3	$\overline{\text{LOD-TR1}}$	I	Terminal to input photo transistor to detect whether the disc is set in holder (whether disc is present or not), or whether the holder is stored in magazine. "H": disc present, "L": holder stored in magazine
4	AVSS	–	GND terminal of A/D converter
5	POSSW	I	Terminal to input SW to detect standard position of rising and descending of the mechanism
6	$\overline{\text{DNOTR}}$	I	Terminal to input photo sensor to detect Disk No.
7	AVREF1	–	Terminal to input D/A converter standard voltage
8	$\overline{\text{RXD}}$	I	Terminal to input NDS BUS receiving DATA
9	$\overline{\text{TXD}}$	O	Terminal to output NDS BUS sending DATA
10	REQ	O	Terminal to output NDS BUS Request. "H": time to send status to head, since auto changer situation changes
11	SQSO	I	Terminal to input SUB-Q data from CXD 2545
12	NC	I	Not in use
13	SQCK	O	Terminal to output SUB-Q data reading clock from CXD2545
14	$\overline{\text{JRES}}$	O	Terminal to output reset signal to MSM6636 IC "L": Reset
15	A/D	O	Terminal to output changes of address/data to MSM6636 IC "L": data, "H": address
16	JSI	I	Terminal to input serial data from MSM6636 IC
17	JSO	O	Terminal to output serial data to MSM6636 IC
18	JCLK	O	Terminal to output serial clock to MSM6636 IC
19 ~ 22	$\overline{\text{TEST1}}$ ~ $\overline{\text{TEST4}}$	I	Not in use
23 ~ 26	NC	I	Not in use
27	AMUTE	O	Terminal to control analog mute circuit
28	D-STOP	O	Terminal to control digital output. Outputs "L" when not played, and outputs "H" when playing.
29	NC	O	Not in use
30	PON1	O	Terminal to output control signal of system power 1. This terminal becomes "H" when "L" is inputted to 62 pin ACC-DET terminal while ACC is on, supplying electric power to the entire system. This terminal also becomes "H" when magazine is placed or eject key is pressed while ACC is off, making the power source ON, and activates Disc Check or eject operation.
31	PON2	O	Terminal to output control signal of system power 2. This terminal becomes "H" when auto changer is played, supplying electric power to CD IC CXD 2545. While auto changer is not played, this terminal becomes "L" after the spindle motor stops, cutting CD IC electric power.
32	NC	I	Not in use
33	VSS	–	GND terminal
34 ~ 39	NC	O	Not in use

No.	Symbol	I/O	Function
40 41	LDCW LDCCW	O	Terminal to output signal to control Load/Unload activation of motor driver mechanism Load / Unload / Brake / Stop LDCCW: "H" / "L" / "H" / "L" LDCW: "L" / "H" / "H" / "L"
42 43	UDCCW UDCW	O	Terminal to output signal to control Up/Down activation of motor driver mechanism Up / Down / Brake / Stop UDCCW: "L" / "H" / "H" / "L" UDCW: "H" / "L" / "H" / "L"
44	LDON	O	Terminal to output signal to control On/Off of APC amplifier for laser output control. "L": laser on
45	$\overline{\text{XRST}}$	O	Terminal to reset output to CXD2545
46	CLOK	O	Terminal to output clock for serial data transfer to CXD2545
47	XLAT	O	Terminal to output latch for serial data to CXD2545
48	DATA	O	Terminal to output serial data to control CXD2545
49	SCLK	O	Clock to read sense data from CXD2545
50	SENS	I	Terminal to input CDIC internal conditions output from CXD2545
51	SYSM	O	Not in use
52 ~ 59	NC	I	Not in use
60	$\overline{\text{RESET}}$	I	Terminal to input reset to main IC
61	SCOR	I	Terminal to input signal from sub code sink S0 + S1 output terminal of CXD2545
62	ACC-DET	I	Terminal to input detection signal of ACC. Inputs "L" when ACC is on, inputs "H" when ACC is off.
63	$\overline{\text{MG-SW}}$	I	Terminal to input SW to detect magazine placement. "L": magazine inserted
64	$\overline{\text{MG-EJ}}$	I	Terminal to input inject Key
65	NC	I	Not in use
66	$\overline{\text{J-INT}}$	I	Terminal to input interrupt signal from MSM6636 IC. Inputs "H" when BUS is in idle, and inputs "L" when receiving or sending is interrupted.
67	NC	I	Not in use
68	VDD		Terminal to supply electric power
69 70	X2 X1	O I	Terminal to connect ceramic resonator to send system clock
71 72 73	VPP XT2 NC	I	Not in use
74	AVDD	–	A/D converter analog power source
75	AVREFO	–	A/D converter analog standard voltage
76	NC	I	Not in use
77	TCLK	O	Terminal to output clock for displaying test mode
78	$\overline{\text{HOLDER-IN}}$	I	Terminal to input SW to detect whether the holder is placed in magazine. "L": holder placed in magazine
79	$\overline{\text{HOLDER-OUT}}$	I	Terminal to input SW to detect whether the holder is removed from magazine. "L": removed
80	$\overline{\text{CLAMP-OFF}}$	I	Terminal to input SW to detect whether clamper is released. "L": clamper released

■EXPLODED VIEW • PARTS LIST

Main section

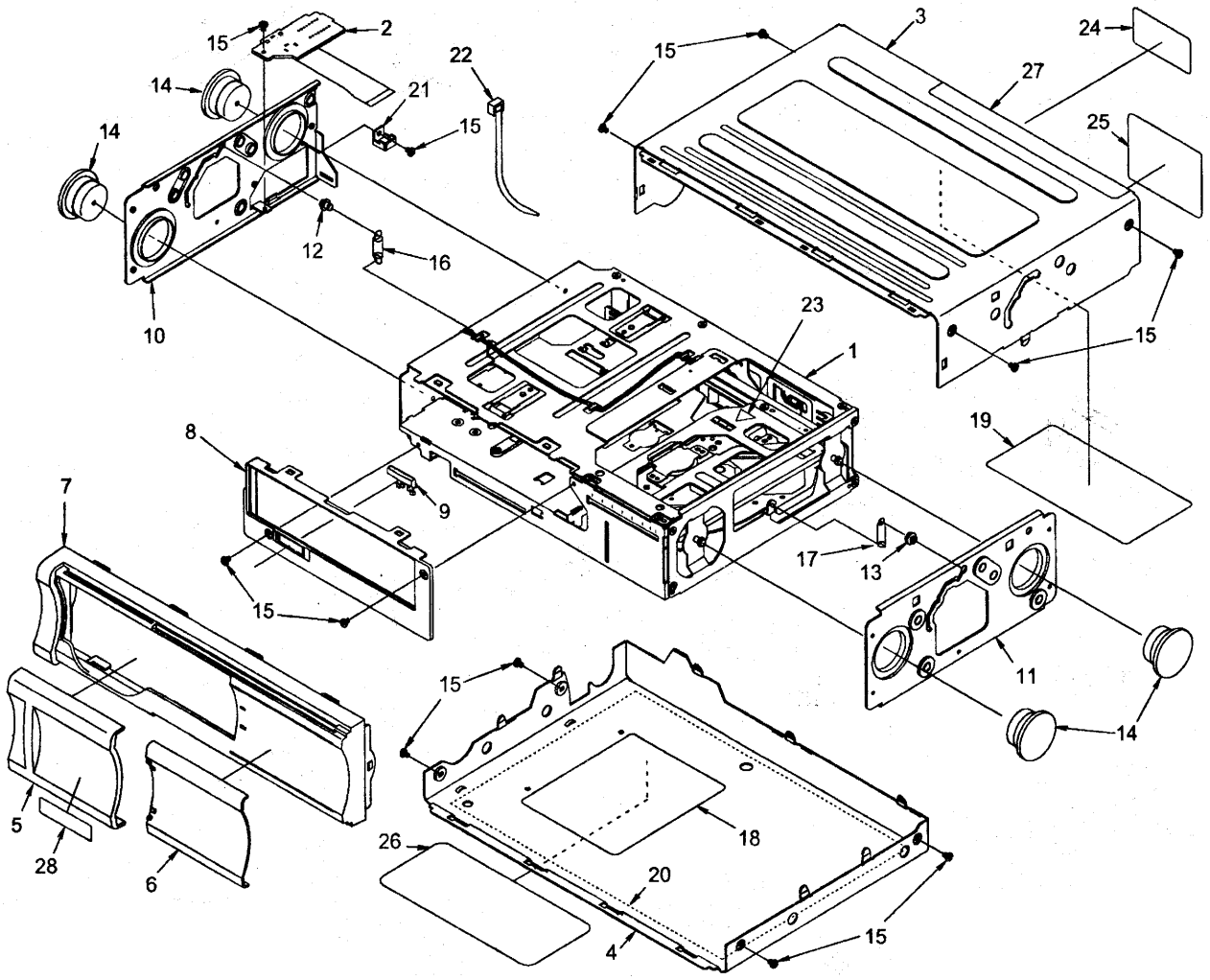

NO.	PART NO.	DESCRIPTION	Q'TY
1	————	CD MECHANISM MODULE	1
2	039-0959-02	CONNECT PWB	1
3	310-1620-07 310-1620-04	UPPER CASE(PN-2144F-A/B) UPPER CASE(PN-2144U-B/C)	1
4	311-1702-10 311-1702-06	LOWER CASE(PN-2144F-A/B) LOWER CASE(PN-2144U-B/C)	1
5	320-0539-00 320-0539-04 320-0539-06	D-PROOF CVR(PN-2144F-A/B) D-PROOF CVR(PN-2144U-B) D-PROOF CVR(PN-2144U-C)	1
6	320-0540-01 320-0540-00	D-PROOF CVR(PN-2144F-A/B) D-PROOF CVR(PN-2144U-B/C)	1
7	370-5672-01	ESCUTCHEON	1
8	371-3852-00	TRIM PLATE	1
9	382-4518-00	BUTTON	1
10	620-0726-02	DAMPER PLATE FRONT	1
11	620-0727-01	DAMPER PLATE REAR	1
12	622-1332-01	F PLATE PIN	1
13	622-1344-01	F PIN SR	1
14	629-0060-00	DAMPER	4

NO.	PART NO.	DESCRIPTION	Q'TY
15	716-1716-00	SPECIAL SCREW	12
16	750-3242-00	FL SPRING F	1
17	750-3243-00	FL SPRING R	1
18	347-5476-00	INSULATOR	1
19	285-1691-00	GUIDE LABEL(PN-2144F-A/B) GUIDE LABEL(PN-2144U-B)	1
20	285-1687-00	GUIDE LABEL	1
21	331-2288-00	LEAD HOLDER	1
22	335-0833-05	LEAD HOLDER	1
23	285-1426-00	GUIDE LABEL(PN-2144F-A/B) GUIDE LABEL(PN-2144U-B)	1
24	285-1633-00	GUIDE LABEL(PN-2144F-A/B)	1
25	286-8629-02 286-8629-03	SETPLATE(PN-2144F-A) SETPLATE(PN-2144F-B)	1
26	286-8781-04	SETPLATE(PN-2144U-B)	1
27	286-8945-00	SETPLATE(PN-2144U-C)	1
28	285-1721-00	GUIDE LABEL(PN-2144U-C)	1

CD mechanism module section

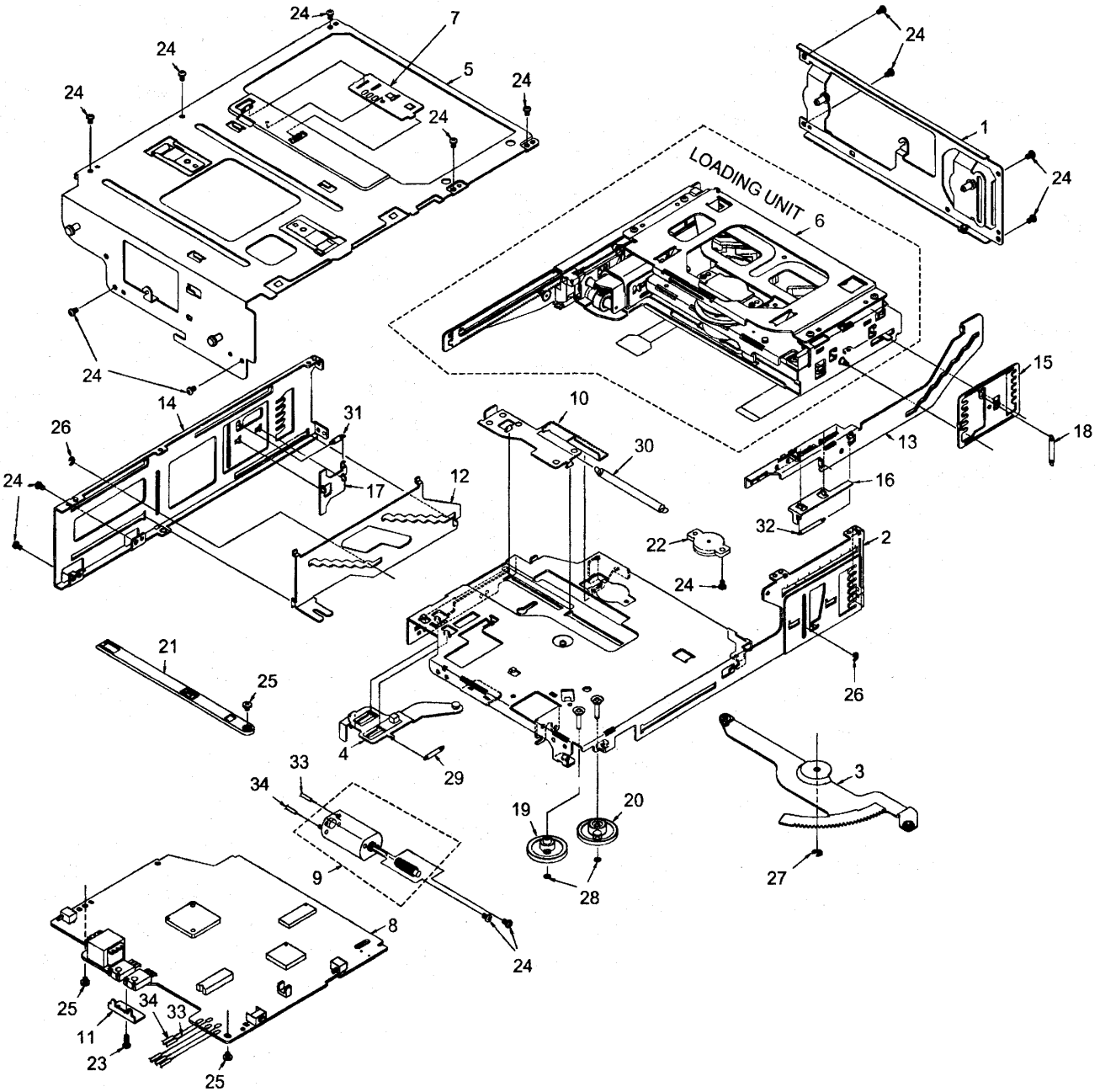

NO.	PART NO.	DESCRIPTION	Q'TY
1	966-0455-01	REAR PANEL-ASS'Y	1
2	966-0460-01	V-CHASSIS-ASS'Y	1
3	966-0461-00	UD-GEAR-P-ASS'Y	1
4	966-0462-01	MG-LO-P-ASS'Y-S	1
5	966-0463-01	UP-PLATE-ASS'Y-S	1
6	————	LOADING UNIT	1
7	039-0922-00	LOADING UNIT PWB	1
8	039-1002-01	MAIN PWB	1
9	SMA-155-100	MOTOR-ASS'Y	1
10	620-0705-01	MG-EJ-PLATE	1
11	620-0707-00	HEAT SINK	1
12	620-0710-00	SLIDE PLATE-L-S	1
13	620-0711-01	SLIDE PLATE-S	1
14	620-0712-00	SIDE PANEL-F	1
15	620-0731-01	GAP PLATE-R	1
16	620-0733-00	PO-SW-PLATE	1
17	620-0734-00	HOLD PLATE-L	1

NO.	PART NO.	DESCRIPTION	Q'TY
18	750-3249-00	GAP SPRING-R	1
19	621-0377-00	V-HELICAL GEAR	1
20	621-0378-00	V-GEAR A	1
21	621-0380-01	MAGAZINE RAIL	1
22	629-0061-00	GEAR DAMPER	1
23	714-2006-81	MACHINE SCREW (M2×6)	1
24	716-1468-00	SCREW (M2×2)	16
25	716-1716-00	SCREW (M2×3)	3
26	743-1500-20	E-RING	2
27	743-2000-20	E-RING	1
28	746-0761-00	WASHER (ϕ2.0)	2
29	750-3238-00	MG-L-SPRING-S	1
30	750-3239-00	MG-EJ-SPRING-S	1
31	750-3244-00	HOLD SPRING	1
32	750-3247-00	PO-SW-SPRING	1
33	800-4910-60	WIRE (BLK)	1
34	802-4910-60	WIRE (RED)	1

Loading unit section

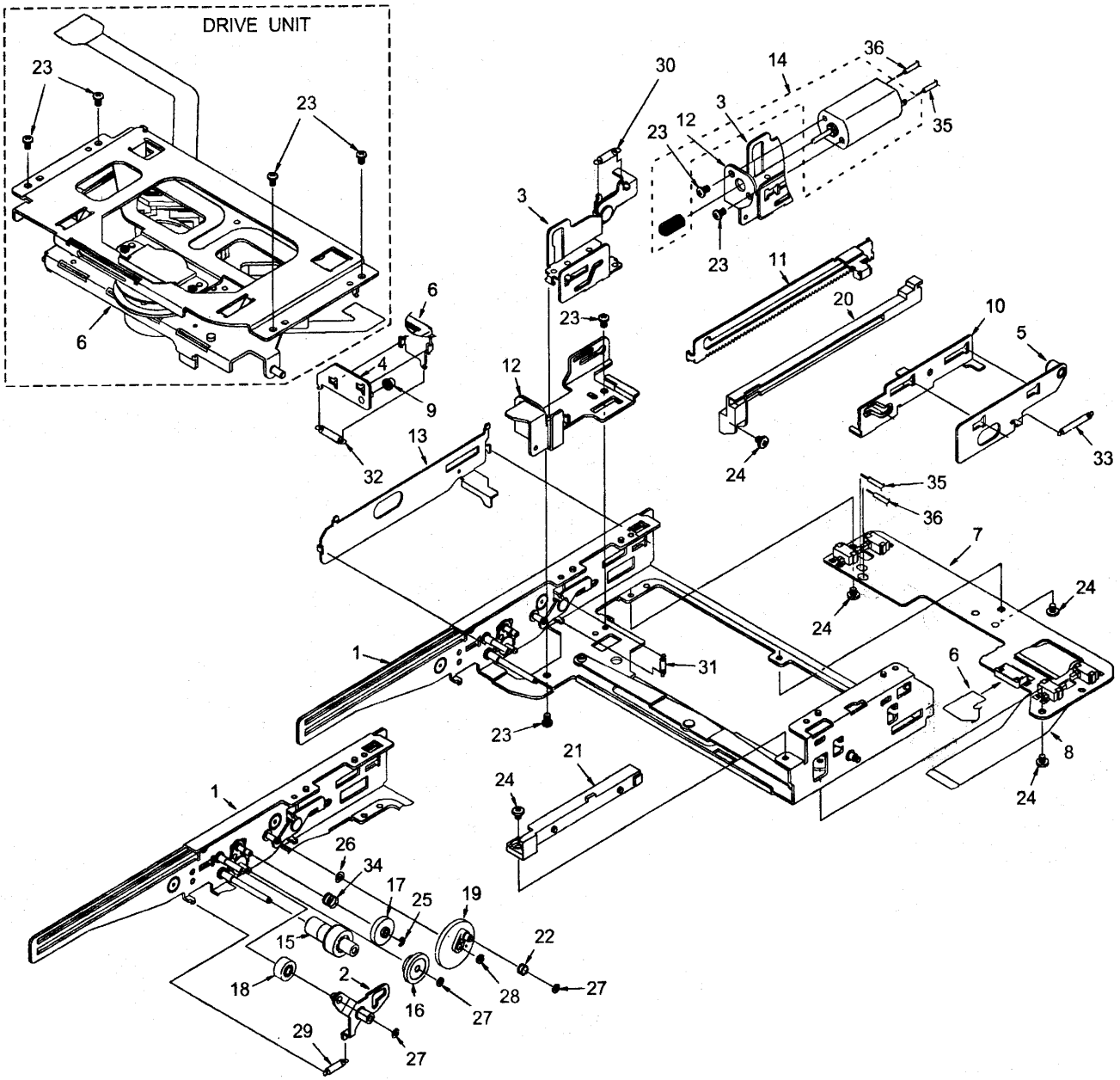

NO.	PART NO.	DESCRIPTION	Q'TY
1	966-0457-01	L-CHASSIS-ASS'Y	1
2	966-0458-00	LOCK-ARM-ASS'Y	1
3	966-0464-00	CLAMP-SE-ASS'Y	1
4	966-0467-00	PUSH PLATE-ASS'Y	1
5	966-0468-00	SIDE PUSH-ASS'Y	1
6	968-0100-01	DRIVE UNIT	1
7	039-0922-00	LOADING UNIT PWB	1
8	039-0924-01	LOAD-D-FPC	1
9	610-0367-00	PUSH-P-ROLLER	1
10	620-0713-01	CLAMP-SW-PLATE	1
11	620-0715-01	HOLDER SHIFT-PL	1
12	620-0717-01	MOTOR-PLATE	1
13	620-0719-00	SWITCH PLATE	1
14	SMA-154-100	MOTOR-ASS'Y (LD)	1
15	621-0382-00	LO-HELICAL GEAR	1
16	621-0383-00	LOADING GEAR	1
17	621-0384-00	SWING GEAR	1
18	621-0385-00	PACK PINON	1

NO.	PART NO.	DESCRIPTION	Q'TY
19	621-0386-01	CAM GEAR	1
20	621-0387-01	HOLDER-G-RAIL-L	1
21	621-0388-01	HOLDER-G-RAIL-R	1
22	622-1330-00	CAM-G-ROLLER	1
23	716-1468-00	SCREW	8
24	716-1716-00	SCREW	5
25	744-0039-00	E-RING	1
26	745-0748-01	WASHER	1
27	746-0761-00	WASHER	3
28	746-0762-00	WASHER	1
29	750-3240-00	LOCK ARM SPRING	1
30	750-3245-00	GAP-L-SPRING	1
31	750-3246-00	LOCK-L-SPRING	1
32	750-3258-00	PUSH-P-SPRING	1
33	750-3259-00	SIDE-P-SPRING	1
34	750-3261-00	SWING SPRING	1
35	800-4906-60	VINYL-COAT-WIRE	1
36	802-4906-60	VINYL-COAT-WIRE	1

Drive unit section

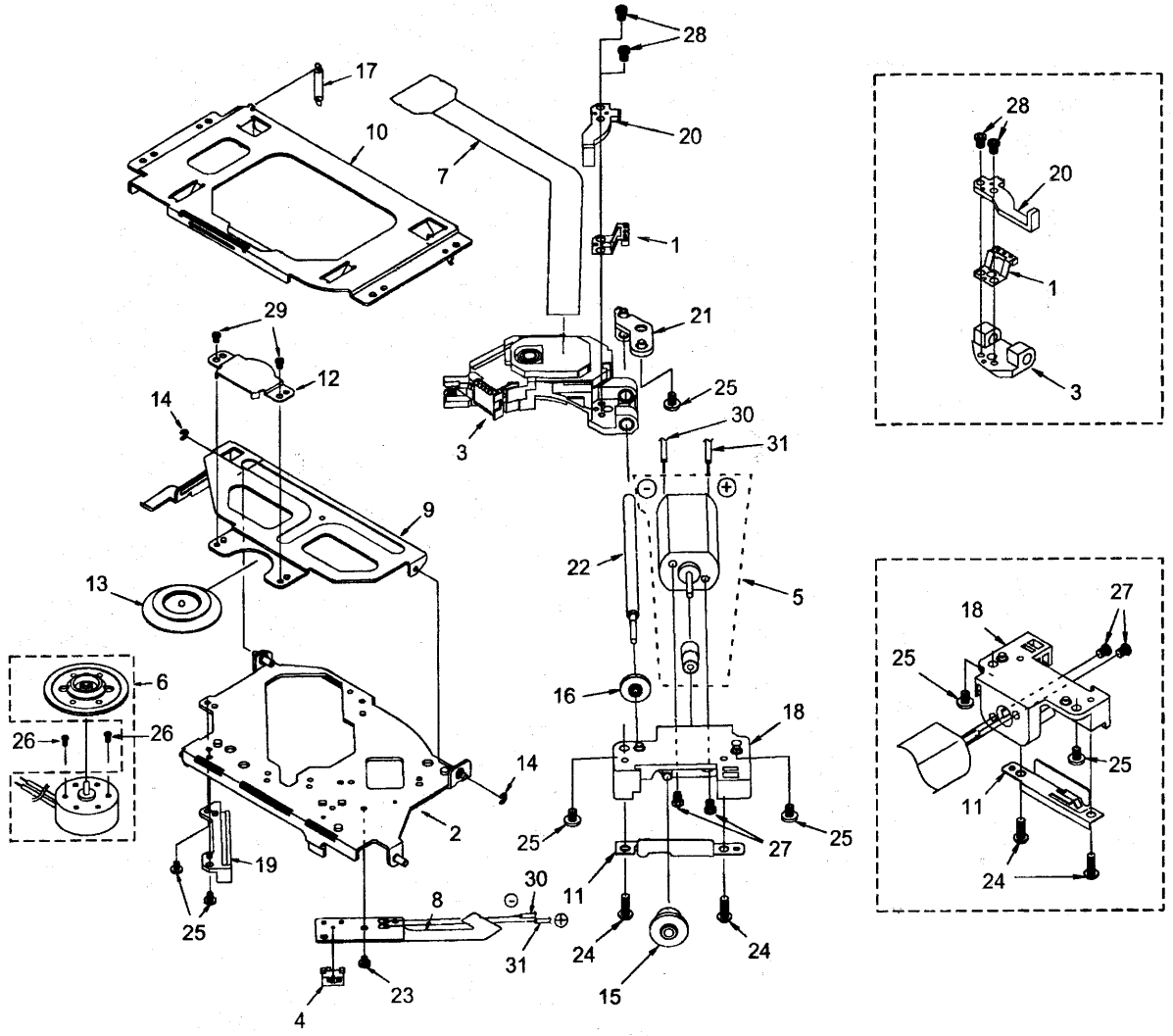

NO.	PART NO.	DESCRIPTION	Q'TY
1	966-0454-00	SH-RACK-ASS'Y	1
2	966-0456-03	DRIVE-PL-ASS'Y	1
3	969-0006-00	PICK UP UNIT	1
4	013-3953-01	SWITCH	1
5	SMA-146-100	MOTOR-ASS'Y (SL)	1
6	SMA-156-100	MOTOR-ASS'Y (SP)	1
7	039-0923-00	PWB	1
8	039-0926-00	PWB	1
9	620-0721-00	CLAMP ARM	1
10	620-0722-00	L-UPPER PLATE	1
11	620-0723-01	SCREW PUSH PLT	1
12	620-0724-00	CLAMPER PLATE	1
13	621-0205-02	CLAMPER RING	1
14	743-1500-20	E-RING	2
15	621-0255-02	SECOND GEAR	1
16	621-0256-01	LS-GEAR	1

NO.	PART NO.	DESCRIPTION	Q'TY
17	750-3241-00	CLAMP A SPRING	1
18	621-0389-01	MOTOR HOLDER	1
19	621-0390-00	PICK UP GUIDE	1
20	621-0391-01	SCREW-HOL-BASE	1
21	621-0392-00	LS-HOLDER-R	1
22	624-0017-00	LEAD SCREW	1
23	716-0484-10	SCREW	1
24	716-0675-00	SCREW	2
25	716-1716-00	SCREW	5
26	716-1733-00	SCREW	2
27	732-2004-11	LEAD SCREW	2
28	739-1735-17	PRECISION SCREW	2
29	739-2020-17	PRECISION SCREW	2
30	801-4912-60	VINYL-COAT-WIRE	1
31	803-4910-60	VINYL-COAT-WIRE	1

■ELECTRICAL PARTS LIST

Main PWB section (B1)

Note) Several different parts of the same reference number are alternative parts. One of those parts is used in the set.

REF No.	PART No.	DESCRIPTION
C 101	178-1042-78	0.1μF
C 102	184-4773-31	16V470μF
C 103	173-1021-11	1000pF J
C 104	178-1032-78	0.01μF
C 105	042-0452-01	10V220μF
C 106	178-1032-78	0.01μF
C 107	042-0452-01	10V220μF
C 108	178-1032-78	0.01μF
C 109	183-1073-12	6.3V100μF
C 110	183-1073-12	6.3V100μF
C 111	183-1063-31	16V10μF
C 112	178-1032-78	0.01μF
C 201	183-3363-21	10V33μF
C 202	183-3363-21	10V33μF
C 203	176-1511-00	150pF CH
C 204	176-1511-00	150pF CH
C 205	178-1032-78	0.01μF
C 206	176-2201-00	22pF CH
C 207	176-2201-00	22pF CH
C 208	172-1041-11	0.1μF
C 209	183-1073-12	6.3V100μF
C 210	042-0452-01	10V220μF
C 211	042-0452-01	10V220μF
C 212	042-0452-01	10V220μF
C 213	042-0452-01	10V220μF
C 221	178-5612-78	560pF
C 222	178-5612-78	560pF
C 223	178-5612-78	560pF
C 224	178-5612-78	560pF
C 301	178-1032-78	0.01μF
C 426	178-1032-78	0.01μF
C 427	183-3363-21	10V33μF
C 428	178-1032-78	0.01μF
C 429	178-1032-78	0.01μF
C 430	183-3363-21	10V33μF
C 431	183-3363-21	10V33μF
C 432	176-3901-00	39pF CH
C 433	176-2096-00	2pF CJ
C 434	178-1032-78	0.01μF
C 435	183-1073-12	6.3V100μF
C 501	178-1032-78	0.01μF
C 502	172-1041-11	0.1μF
C 503	178-3332-78	0.033μF
C 504	178-1032-78	0.01μF
C 505	183-3353-61	50V3.3μF
C 601	178-1042-78	0.1μF
C 602	178-1022-78	1000pF
C 604	176-1511-00	150pF CH
C 605	176-1511-00	150pF CH
C 606	183-6843-61	50V0.68μF
C 607	183-2253-62	50V2.2μF
C 608	176-1201-00	12pF CH
C 609	178-1032-78	0.01μF
C 610	178-1042-78	0.1μF
C 701	178-1032-78	0.01μF
C 702	176-1811-00	180pF CH
C 703	178-3312-78	330pF
C 704	178-4732-78	0.047μF
C 705	178-3312-78	330pF
C 706	176-1811-00	180pF CH
C 707	178-4732-78	0.047μF
C 708	178-1532-78	0.015μF
C 709	178-6822-78	6800pF
C 710	178-1032-78	0.01μF
C 711	178-1032-78	0.01μF
C 712	183-1073-21	10V100μF
C 713	178-1042-78	0.1μF
C 714	183-1073-12	6.3V100μF
C 801	178-1032-78	0.01μF
C 802	178-1522-78	1500pF
C 803	178-1032-78	0.01μF

REF No.	PART No.	DESCRIPTION
C 804	183-3363-21	10V33μF
C 805	178-4745-79	0.47μF
C 806	178-4732-78	0.047μF
C 807	178-1032-78	0.01μF
C 808	178-1032-78	0.01μF
C 809	183-3363-21	10V33μF
C 810	178-2212-78	220pF
C 811	178-1042-78	0.1μF
C 812	178-2212-78	220pF
C 813	178-1032-78	0.01μF
C 814	176-1007-00	10pF CH
C 815	178-1032-78	0.01μF
C 816	178-4722-78	4700pF
C 817	178-1032-78	0.01μF
C 818	178-1022-78	1000pF
C 819	176-2701-00	27pF CH
C 820	176-2701-00	27pF CH
C 821	176-5601-00	56pF CH
C 822	176-5601-00	56pF CH
C 823	178-1032-78	0.01μF
C 824	178-1032-78	0.01μF
C 825	183-1073-12	6.3V100μF
C 827	178-1042-78	0.1μF
C 828	178-1032-78	0.01μF
C 829	183-2263-11	6.3V22μF
C 830	183-4763-11	6.3V47μF
C 831	178-1032-78	0.01μF
C 832	178-1032-78	0.01μF
D 102	001-0377-47	MA4091M
D 103	001-0377-45	MA4082H
D 104	001-0377-31	MA4056L
D 105	001-0330-00	1SS119
D 106	001-0503-33	HZS6B2L
D 301	001-0377-33	MA4056H
D 302	001-0377-39	MA4068H
D 303	001-0563-00	GL380
D 304	001-0563-00	GL380
D 401	001-0330-00	1SS119
D 501	001-0466-00	S5688B
D 602	001-0466-00	S5688B
D 603	001-0330-00	1SS119
D 604	001-0330-00	1SS119
D 605	001-0528-36	MA8062-H
D 606	001-0528-36	MA8062-H
D 607	001-0421-38	MTZJ36
D 608	001-0421-38	MTZJ36
D 609	001-0330-00	1SS119
D 610	001-0330-00	1SS119
D 611	001-0330-00	1SS119
FIL 601	060-3101-04	NFM39R471
FIL 602	060-3101-04	NFM39R471
FIL 603	060-3101-05	NFM39R102
FIL 604	060-3101-05	NFM39R102
FIL 605	060-3101-05	NFM39R102
IC 201	051-3005-00	NJM4556AD
IC 202	051-3005-00	NJM4556AD
IC 301	051-1408-00	LB1649
IC 402	051-5703-00	CXA1791M
IC 501	052-5020-00	μPD78054GC-405-3B9
IC 502	051-5806-00	GP1S94
IC 503	051-0869-55	NJM2103M
IC 601	051-6604-08	MSM6636GS-R1
IC 602	051-0857-05	TC74HC00AF
IC 701	051-6025-08	BA6297AFP
IC 801	051-6313-00	CXD2545Q
IC 802	051-6314-05	TC9404FN
J 101	074-1138-63	13P
J 102	074-1138-65	15P
J 103	074-1158-69	19P
L 102	010-2198-52	3.3μH

REF No.	PART No.	DESCRIPTION
L 401	010-2230-72	10μH
Q 101	103-1683-50	2SD1683ST
Q 102	125-0014-02	DTA114EK
Q 103	125-2004-02	RN1402
Q 104	103-1683-50	2SD1683ST
Q 105	125-0014-02	DTA114EK
Q 106	125-2004-02	RN1402
Q 107	103-1858-00	2SD1858
Q 108	103-1858-00	2SD1858
Q 109	100-1048-00	2SA1048
Q 110	125-2004-02	RN1402
Q 111	125-0014-02	DTA114EK
Q 112	125-2004-02	RN1402
Q 201	103-1306-00	2SD1306
Q 202	103-1306-00	2SD1306
Q 203	103-1306-00	2SD1306
Q 204	103-1306-00	2SD1306
Q 209	100-1048-00	2SA1048
Q 210	125-2004-02	RN1402
Q 401	101-1237-50	2SB1237QR
Q 601	100-1162-00	2SA1162
Q 602	102-2712-00	2SC2712
Q 603	102-2712-00	2SC2712
Q 604	102-2712-00	2SC2712
Q 605	125-0014-02	DTA114EK
Q 606	102-2712-00	2SC2712
Q 607	125-2004-02	RN1402
R 101	117-2711-10	1/10W 270Ω
R 102	111-2211-81	1/2WS 220Ω
R 103	111-1001-81	1/2WS 10Ω
R 104	117-1211-10	1/10W 120Ω
R 105	117-1531-10	1/10W 15kΩ
R 106	117-1021-10	1/10W 1kΩ
R 107	117-2231-10	1/10W 22kΩ
R 108	117-4711-10	1/10W 470Ω
R 201	117-1131-10	1/10W 11kΩ
R 202	117-1131-10	1/10W 11kΩ
R 203	117-1531-10	1/10W 15kΩ
R 204	117-1531-10	1/10W 15kΩ
R 205	117-1031-10	1/10W 10kΩ
R 206	117-1031-10	1/10W 10kΩ
R 207	117-1031-10	1/10W 10kΩ
R 208	117-1031-10	1/10W 10kΩ
R 209	117-8221-10	1/10W 8.2kΩ
R 210	117-1031-10	1/10W 10kΩ
R 211	117-2201-10	1/10W 22Ω
R 212	117-2201-10	1/10W 22Ω
R 213	117-2201-10	1/10W 22Ω
R 214	117-2201-10	1/10W 22Ω
R 215	117-1031-10	1/10W 10kΩ
R 216	117-1031-10	1/10W 10kΩ
R 217	117-1031-10	1/10W 10kΩ
R 218	117-1031-10	1/10W 10kΩ
R 219	117-2221-10	1/10W 2.2kΩ
R 220	117-2221-10	1/10W 2.2kΩ
R 221	117-2221-10	1/10W 2.2kΩ
R 222	117-2221-10	1/10W 2.2kΩ
R 229	117-1031-10	1/10W 10kΩ
R 230	117-1031-10	1/10W 10kΩ
R 303	117-1811-10	1/10W 180Ω
R 422	117-6821-10	1/10W 6.8kΩ
R 423	117-3321-10	1/10W 3.3kΩ
R 424	117-1821-10	1/10W 1.8kΩ
R 425	117-1031-10	1/10W 10kΩ
R 426	117-2231-10	1/10W 22kΩ
R 427	117-5631-10	1/10W 56kΩ
R 428	117-1001-10	1/10W 10Ω
R 429	117-1341-10	1/10W 130kΩ
R 430	117-8241-10	1/10W 820kΩ
R 431	117-8241-10	1/10W 820kΩ
R 432	117-1341-10	1/10W 130kΩ

REF No.	PART No.	DESCRIPTION
R 433	117-3331-10	1/10W 33kΩ
R 434	117-3331-10	1/10W 33kΩ
R 435	117-1011-10	1/10W 100Ω
R 502	117-4731-10	1/10W 47kΩ
R 503	117-4731-10	1/10W 47kΩ
R 504	117-4731-10	1/10W 47kΩ
R 505	117-4731-10	1/10W 47kΩ
R 506	117-1041-10	1/10W 100kΩ
R 507	117-4731-10	1/10W 47kΩ
R 508	117-2711-10	1/10W 270Ω
R 509	117-1041-10	1/10W 100kΩ
R 510	117-1041-10	1/10W 100kΩ
R 511	117-4731-10	1/10W 47kΩ
R 512	117-4731-10	1/10W 47kΩ
R 513	117-4731-10	1/10W 47kΩ
R 514	117-4731-10	1/10W 47kΩ
R 515	117-4731-10	1/10W 47kΩ
R 516	117-4731-10	1/10W 47kΩ
R 517	117-4731-10	1/10W 47kΩ
R 518	117-1031-10	1/10W 10kΩ
R 519	111-2221-91	1/4WS 2.2kΩ
R 520	117-5631-10	1/10W 56kΩ
R 521	117-1231-10	1/10W 12kΩ
R 530	117-2211-10	1/10W 220Ω
R 531	117-4731-10	1/10W 47kΩ
R 601	117-5621-10	1/10W 5.6kΩ
R 602	111-1001-91	1/4WS 10Ω
R 603	111-1001-91	1/4WS 10Ω
R 604	117-1001-10	1/10W 10Ω
R 605	117-1001-10	1/10W 10Ω

REF No.	PART No.	DESCRIPTION
R 606	117-5631-10	1/10W 56kΩ
R 607	117-2231-10	1/10W 22kΩ
R 608	117-2231-10	1/10W 22kΩ
R 609	117-1031-10	1/10W 10kΩ
R 610	117-3321-10	1/10W 3.3kΩ
R 611	117-3321-10	1/10W 3.3kΩ
R 612	117-1031-10	1/10W 10kΩ
R 613	117-1031-10	1/10W 10kΩ
R 614	117-1031-10	1/10W 10kΩ
R 615	117-1031-10	1/10W 10kΩ
R 616	117-1031-10	1/10W 10kΩ
R 617	117-4731-10	1/10W 47kΩ
R 618	117-1021-10	1/10W 1kΩ
R 619	117-3911-10	1/10W 390Ω
R 620	117-5631-10	1/10W 56kΩ
R 621	117-5631-10	1/10W 56kΩ
R 622	117-4711-10	1/10W 470Ω
R 701	117-1531-10	1/10W 15kΩ
R 702	117-1841-10	1/10W 180kΩ
R 703	117-2231-10	1/10W 22kΩ
R 704	117-3331-10	1/10W 33kΩ
R 705	117-2231-10	1/10W 22kΩ
R 706	117-6831-10	1/10W 68kΩ
R 707	117-1531-10	1/10W 15kΩ
R 708	117-6831-10	1/10W 68kΩ
R 709	117-1841-10	1/10W 180kΩ
R 710	117-3331-10	1/10W 33kΩ
R 711	117-6831-10	1/10W 68kΩ
R 712	117-1331-15	1/10W 13kΩ
R 713	117-6831-10	1/10W 68kΩ

REF No.	PART No.	DESCRIPTION
R 714	117-3331-10	1/10W 33kΩ
R 715	117-2231-10	1/10W 22kΩ
R 716	117-6831-10	1/10W 68kΩ
R 717	117-8221-10	1/10W 8.2kΩ
R 718	117-8221-10	1/10W 8.2kΩ
R 719	117-1531-10	1/10W 15kΩ
R 720	117-1531-10	1/10W 15kΩ
R 801	117-1031-10	1/10W 10kΩ
R 802	117-1051-10	1/10W 1MΩ
R 803	117-3321-10	1/10W 3.3kΩ
R 804	117-1041-10	1/10W 100kΩ
R 805	117-1031-10	1/10W 10kΩ
R 806	117-6821-10	1/10W 6.8kΩ
R 807	117-3631-10	1/10W 36kΩ
R 808	117-1241-10	1/10W 120kΩ
R 809	117-3631-10	1/10W 36kΩ
R 810	117-3331-10	1/10W 33kΩ
R 811	117-1021-10	1/10W 1kΩ
R 812	117-1041-10	1/10W 100kΩ
R 813	117-1211-10	1/10W 120Ω
R 814	117-3311-10	1/10W 330Ω
R 815	117-1051-10	1/10W 1MΩ
R 816	117-1211-10	1/10W 120Ω
R 817	117-4731-10	1/10W 47kΩ
S 501	013-3989-00	SPPB63
S 502	013-7204-00	SPPB64
S 503	013-6100-10	SKHLLD
X 101	061-3038-00	HC49 16.9344MHz
X 501	060-0319-00	4.915MHz
X 601	060-1025-90	8.0MHz

Loading unit PWB section (B2)

REF No.	PART No.	DESCRIPTION
S 501	013-3953-01	SPPB32
S 502	013-3953-01	SPPB32

REF No.	PART No.	DESCRIPTION
S 503	013-3953-01	SPPB32
S 504	013-3953-01	SPPB32

REF No.	PART No.	DESCRIPTION
Q 501	060-0252-01	PT4850F
Q 502	060-0252-01	PT4850F

■CIRCUIT DIAGRAM

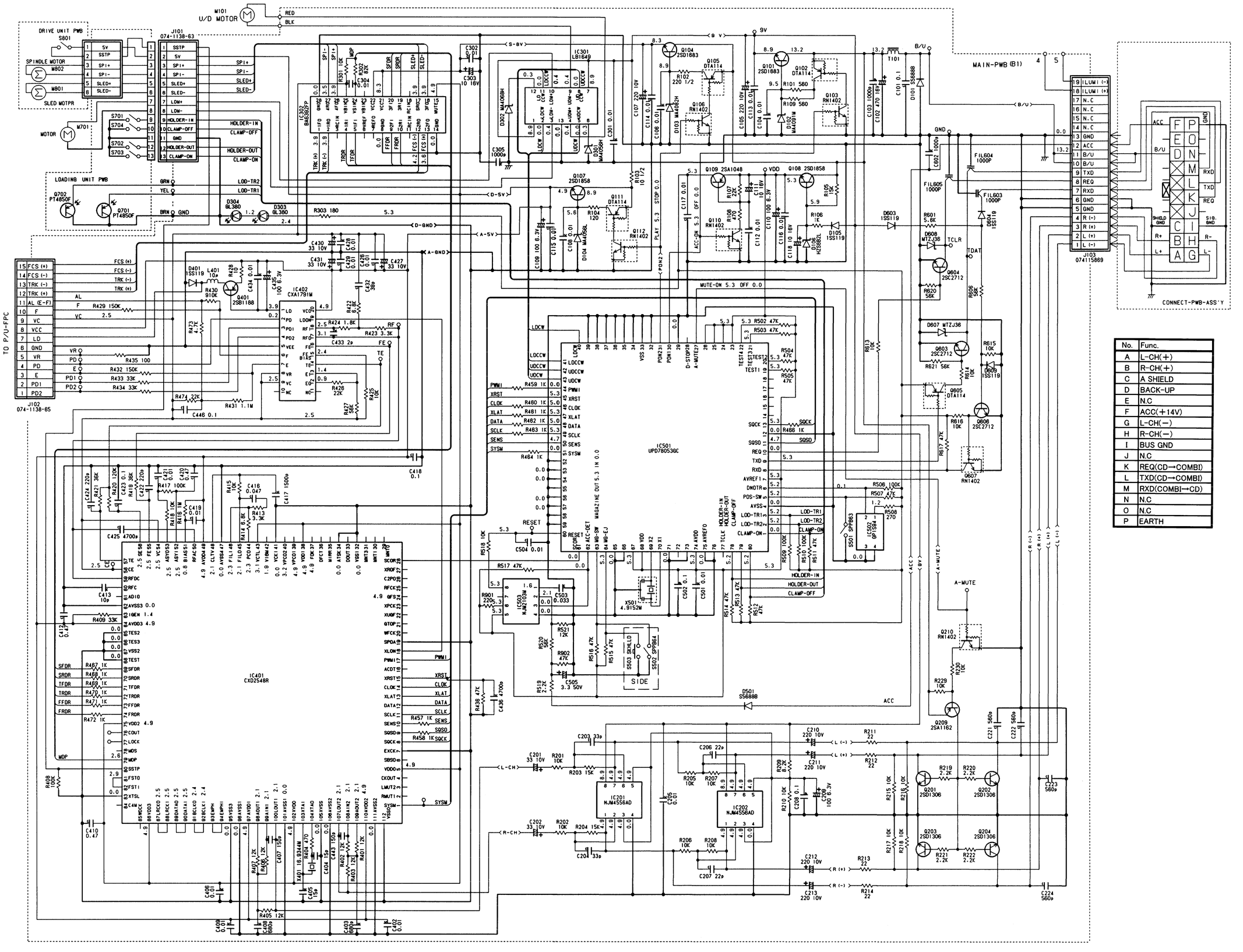

No.	Func.
A	L-CH(+)
B	R-CH(+)
C	A SHIELD
D	BACK-UP
E	N.C
F	ACC(+14V)
G	L-CH(−)
H	R-CH(−)
I	BUS GND
J	N.C
K	REQ(CD→COMBI)
L	TXD(CD→COMBI)
M	RXD(COMBI→CD)
N	N.C
O	N.C
P	EARTH

PN-2144A/D/F/U
PP-2144H

■PRINTED WIRING BOARD

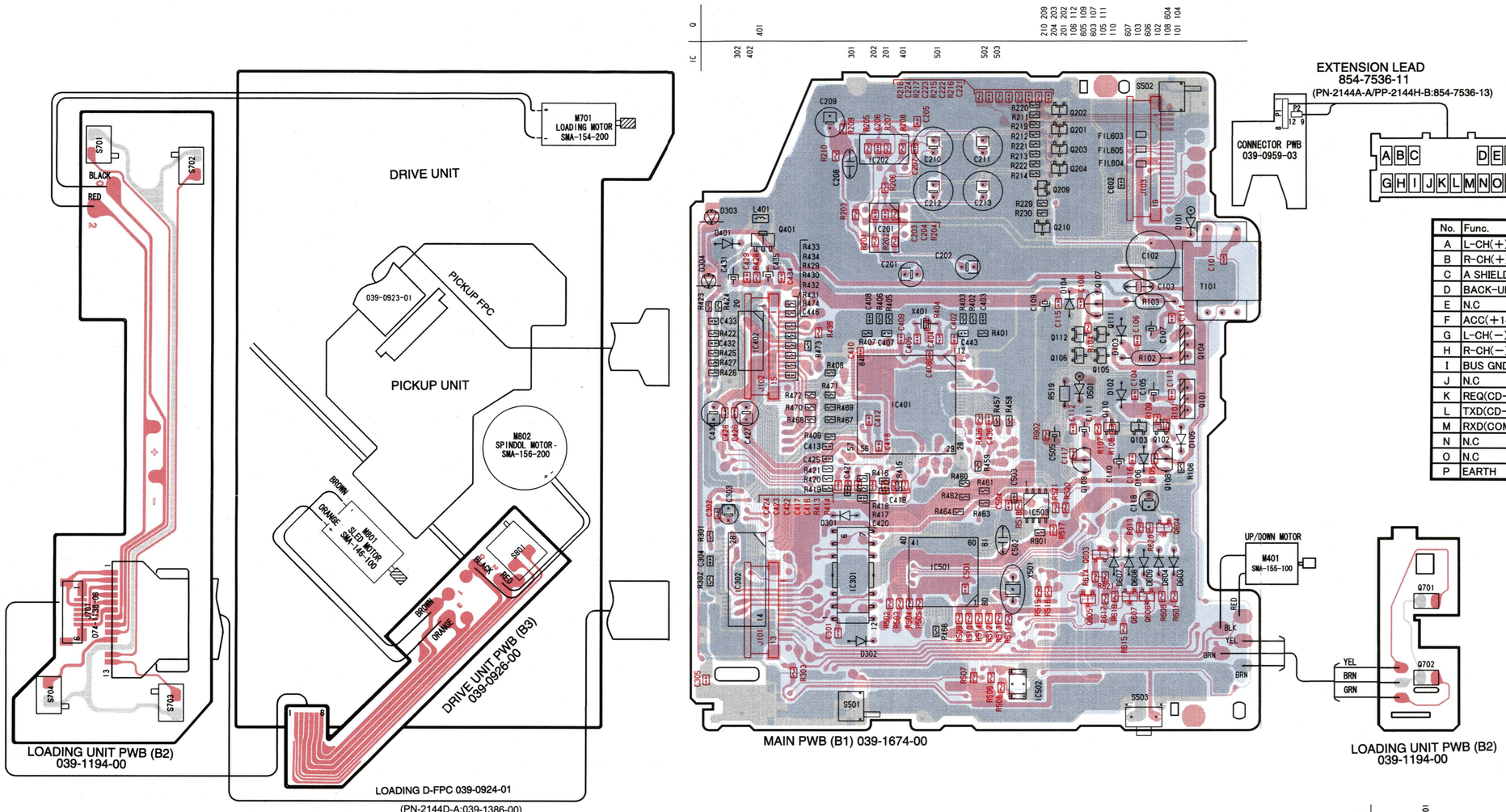

No.	Func.	COLOR	P1,2	J103
A	L-CH(+)	GREEN	2	2
B	R-CH(+)	GREY	3	3
C	A SHIELD	PURPLE	5	5,6
D	BACK-UP	YELLOW	10	10,11
E	N.C		—	—
F	ACC(+14V)	RED	9	12
G	L-CH(−)	GREEN/BLACK	1	1
H	R-CH(−)	GREY/BLACK	4	4
I	BUS GND	BLACK	12	5,6
J	N.C		—	—
K	REQ(CD→COMBI)	BLUE	7	8
L	TXD(CD→COMBI)	WHITE	8	9
M	RXD(COMBI→CD)	ORANGE	6	7
N	N.C		—	—
O	N.C		—	—
P	EARTH	BROWN	11	5,6